IN CAR NETWORK TOPOLOGY EVOLUTION

S80 1998 (19)

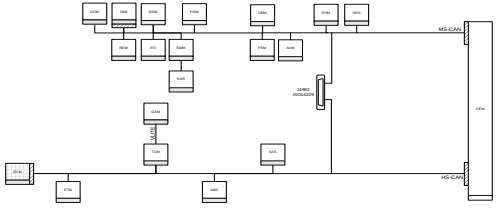

XC90 2002 (38)

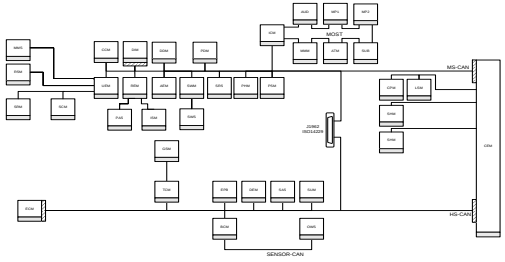

V40 2003 (49)

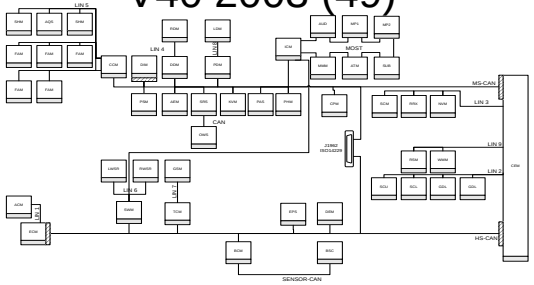

S80 2006 (68)

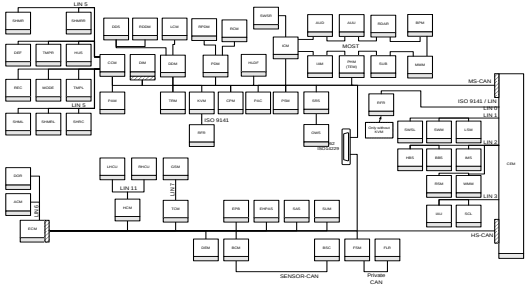

V60 PHEV 2012 (78)

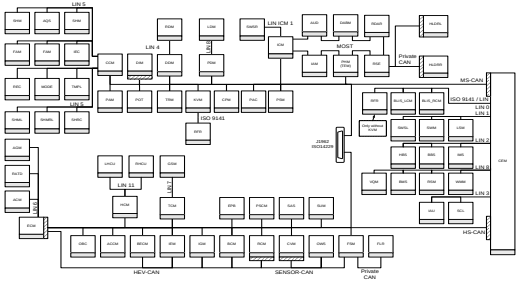
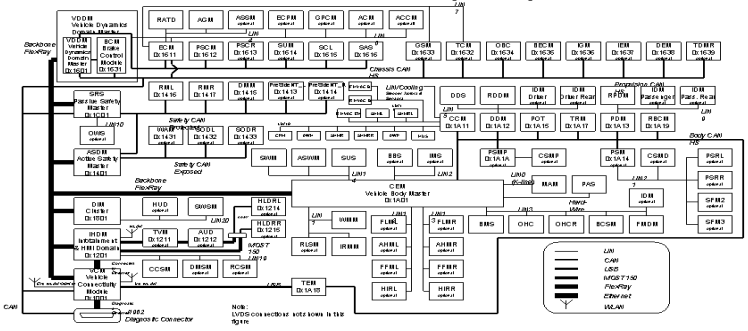
XC90 2015 (108)